YULAN

YULAN ELECTRICAL CO., LIMITED

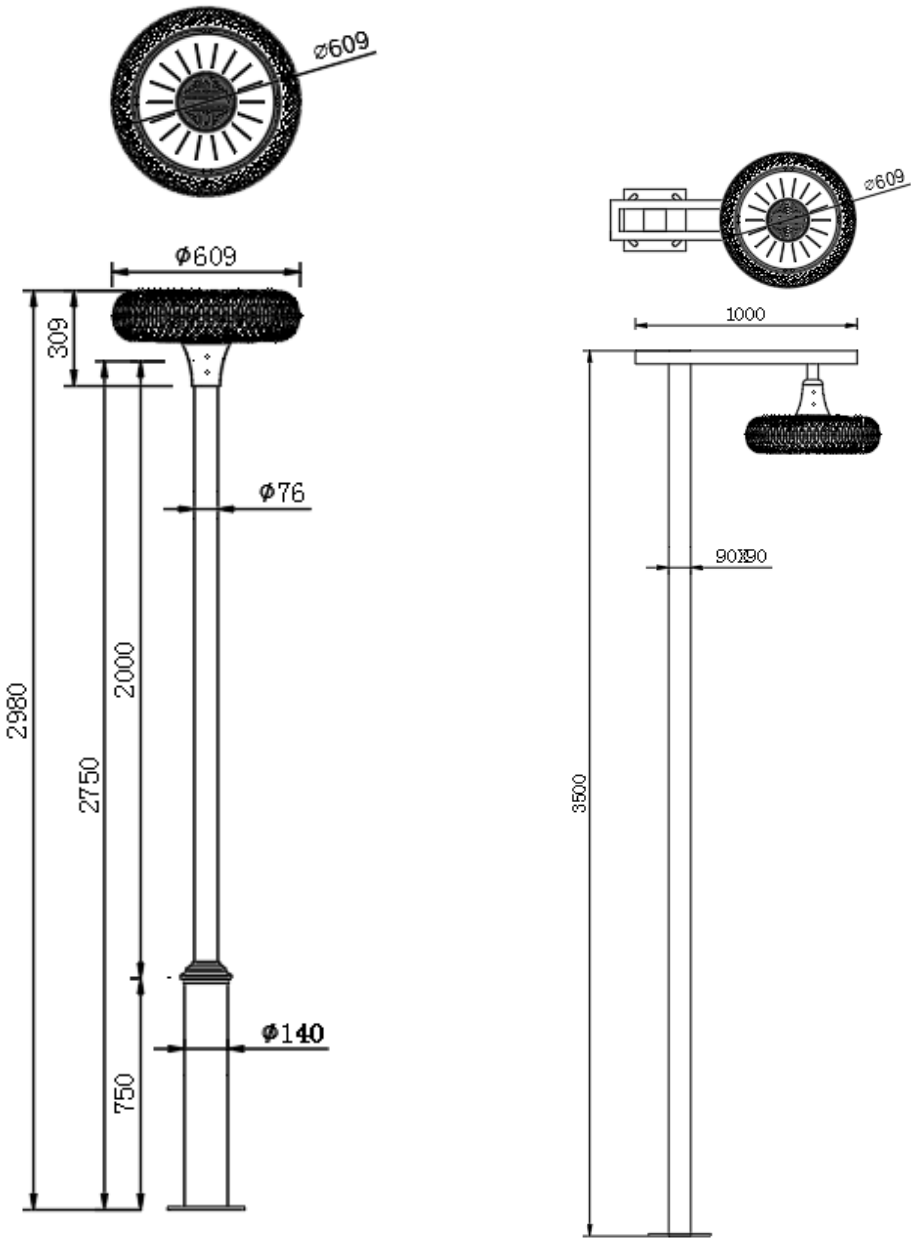

YULAN ELECTRICAL CO., LIMITED

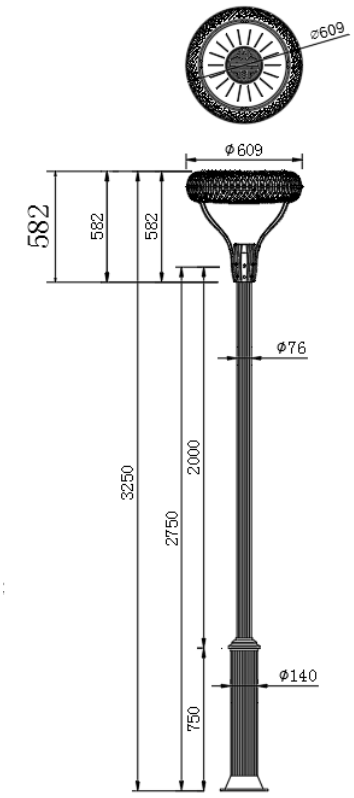

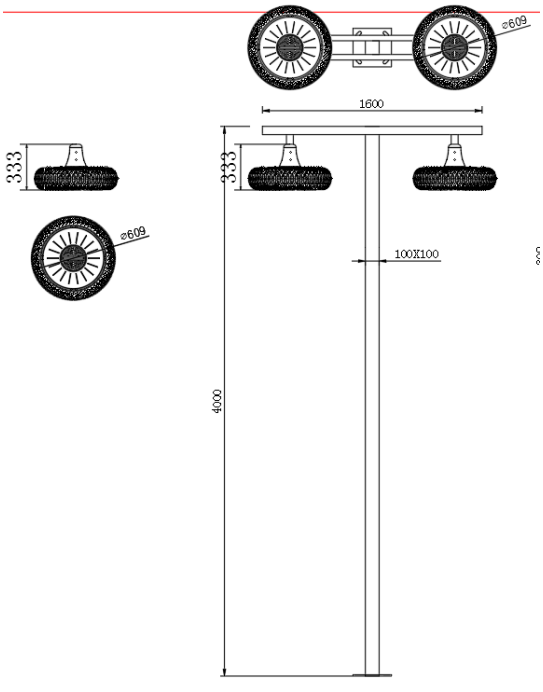

YULAN

YULAN ELECTRICAL CO., LIMITED

Product name	Aluminium Led landscape lamp post for garden path light		
Input voltage	AC220V ± 20%	Power	20W-60W
Frequency range	50-60Hz	Color Temperature	2000K-6000K
PF(Power Factor)	＞0.95	CRI	＞70
Light source	Philips, Core chip	Power supply	Meanwell, Inventr
IP Rating	IP65	Light pole installation height	3-6m
Housing Material	Die-cast Aluminum + Aluminum Profiles	Warranty	5 years
Working environment temperature	-40℃～50℃	Working environment humidity	10%～90%